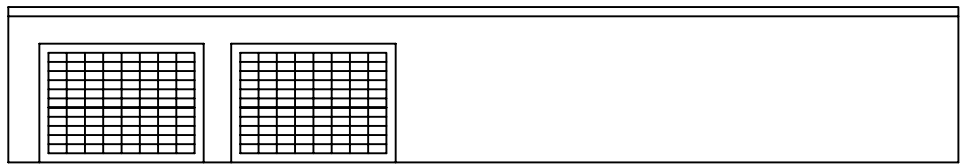

FRONT ELEVATION

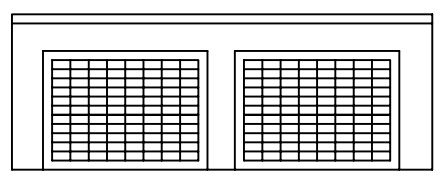

SIDE ELEVATION

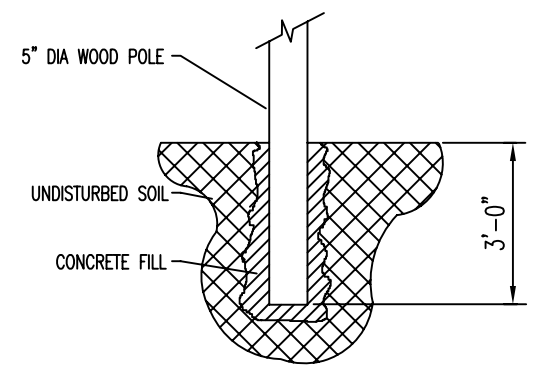

DETAIL #1

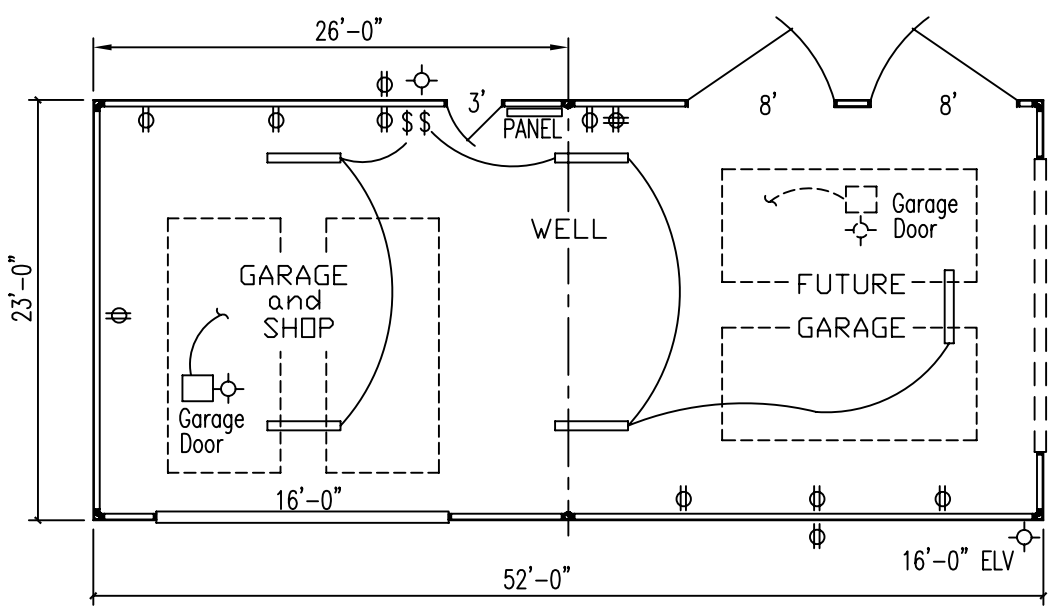

FLOOR PLAN

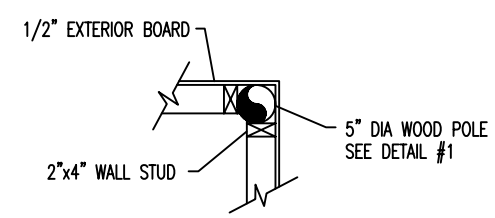

SECTION "A-A"
(CUT @ CORNER WALL)

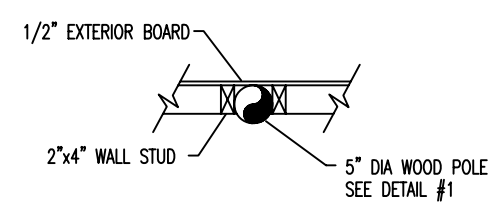

SECTION "B-B"
(CUT @ WALL)

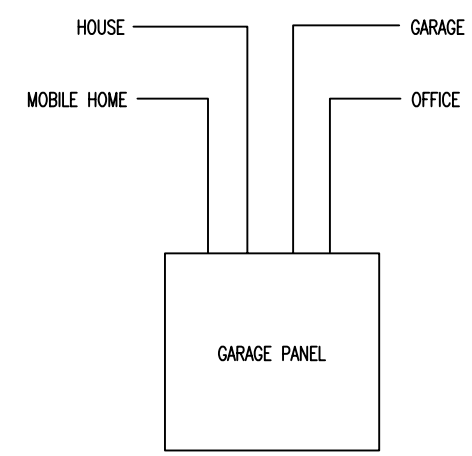

ELECTRICAL SCHEMATIC

REV	DATE	REVISION	BY
P		ISSED PRELIMINARY	TDC/GJR

THIS DRAWING AND ALL INFORMATION THEREON IS PROPERTY OF TECHNOLOGY DEVELOPMENT CORPORATION, AND SHALL BE RETAINED IN CONFIDENCE WITHOUT RELEASE TO THIRD PERSONS, COPYING OR OTHER USE DETRIMENTAL TO SAID COMPANY. ACCEPTANCE OF THIS DRAWING, SUBJECT TO RETURN UPON DEMAND, IS CONSTRUED TO BE AGREEMENT TO THE ABOVE.

TECHNOLOGY DEVELOPMENT CENTER, INC.
Where Ideas Become Reality
(713) 894-8634
CYPRESS, TEXAS 77429

PROJECT CYPRESS
GARAGE FLOOR PLAN

SCALE: 3/16"=1'-0"		JOB NO.	REV
CHECKED BY:		APPROVED BY:	P
DRAWN BY: T.D.C. - G.J.R.	10/29/92	DWG. NO. H-11	
FILE NAME: H11.DWG	01/18/93		